Micro-Transfer-Printed III-V-on-Si Laser with 120nm tuning range

(Student paper)

Emadreza Soltanian[1,2*], Grigorij Muliuk[3], Sarah Uvin[4], Dongbo Wang[1,2], Guy Lepage[3], Peter Verheyen[3], Joris Van Campenhout[3], Stefan Ertl[5] , Johanna Rimböck[5], Nicolas Vaissiere[6], Delphine Néel[6], Joan Ramirez[6], Jing Zhang[1,2] and Gunther Roelkens[1,2]

[1]Photonics Research Group, INTEC, Ghent University - IMEC, Ghent, Belgium
[2]Center for Nano- and Biophotonics, Ghent University - IMEC, Ghent, Belgium
[3]IMEC, Kapeldreef 75, 3001 Heverlee, Belgium
[4]Brolis Sensor Technology BV, Bollebergen 2B/Box 11, 9052 Zwijnaarde, Belgium
[5]EV Group E.Thallner GmbH, DI Erich Thallner Str. 1, 4782 St. Florian am Inn, Austria
[6]III-V Lab, Avenue Augustin Fresnel 1, F91767 Palaiseau, France
[*] emadreza.soltanian@ugent.be

Many integrated photonics applications require miniaturized on-chip sources over a wide wavelength range, such as coherent optical communication and spectroscopy. In this work, we demonstrate for the first time a 120nm tuning range (1495nm-1615nm) widely-tunable III-V-on-Si laser realized using micro-transfer printing technology.

Keywords: *Silicon Photonics, Widely Tunable Lasers, Micro-Transfer Printing, Heterogeneous Integration*

INTRODUCTION

Silicon photonics (SiPh) enables the realization of photonic integrated circuits (PICs) on 200mm or 300mm Silicon-on-Insulator (SOI) wafers with high uniformity and yield by leveraging the CMOS fabrication infrastructure [1]. Since Si does not provide optical gain, III-V semiconductors have to be introduced to enable SiPh providing complex PICs for a wide range of applications, such as optical communication, sensing and spectroscopy. Various heterogeneous III-V-on-Si integration methods have been intensively investigated in the past, such as flip-chip integration, die-to-wafer bonding, and even hetero-epitaxial growth [2]. However, these methods suffer from drawbacks like a dedicated III-V process flow and modified back-end process on 200mm wafers in the case of bonding, limited throughput for the flip-chip method and III-V material quality for hetero-epitaxial growth. Here, we use micro-transfer-printing (µTP) [3] for the realization of a 120nm III-V-on-Si widely tunable laser (WTL). The technique allows for high-throughput & wafer-scale III-V integration, minimal disruption to the SiPh process flow, no singulation and handling of individual III-V chips and the possibility of densely integrating different non-native components on the SiPh platform.

DESIGN and FABRICATION

The III-V-on-Si laser structure is based on the µTP of pre-fabricated InP-based semiconductor optical amplifiers (SOAs) as the gain section in a SiPh external cavity. The PICs are fabricated in imec's SiPh pilot line on 200mm SOI wafers with a 400nm thick silicon device layer and a 2µm thick buried oxide layer (BOX), including a back-end stack incorporating the heaters and metal tracks. The µTP process is based on the use of an elastometric poly-dimethylsiloxane (PDMS) stamp to pick-up the pre-fabricated InP-based SOA (which is undercut by selectively etching the release layer) from its native III-V source wafer and to print it on the target substrate, which has recesses in the back-end down to the 3µm wide Si-waveguide. A spray-coated DVS-BCB adhesive bonding layer enables a high-yield printing process. The schematic of µTP of pre-fabricated III-V SOAs on the imec's 400nm SOI platform is shown in Fig. 1.

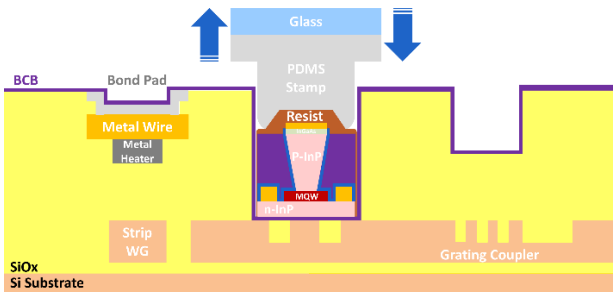

Fig. 1. Schematic of µTP of a pre-fabricated III-V SOA on imec's 400nm SOI platform (not-to-scale).

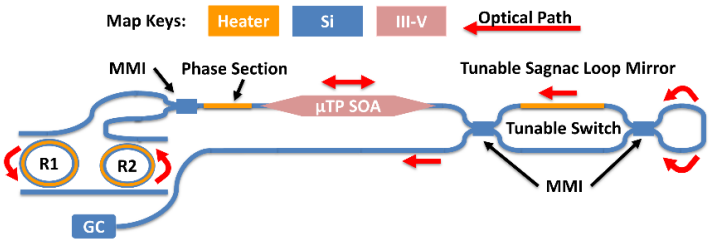

Fig. 2. Schematic layout of the laser cavity design of the individual tunable lasers.

The widely tunable laser is realized by combining two laser cavities in a single mode waveguide, each laser with a different SOA gain peak wavelength. The individual devices are formed by a linear cavity, shown in Fig. 2. The cavity consists of a tunable Sagnac loop mirror, a deep recess to print the pre-fabricated SOA (Fig. 1), a phase section based on thermo-optic tuning, a pair of thermally tunable micro-ring resonators (MRRs), and a grating coupler (GC) as the output of the laser. The tunable Sagnac loop mirror enables the optimization of out-coupling mirror reflectivity. The tunable MRRs with a slightly different radius (27µm and 29.3µm) are used to form a Vernier filter, which enables wavelength selection. The free spectral range (FSR) of each ring is around 4nm and the combined FSR of the Vernier filter is around 45nm in the envisioned wavelength range. 65mW of electrical power is required to tune a single ring over one FSR. The length of the III-V SOAs (fabricated by III-V Lab) are 1mm, including a pair of 180µm long adiabatic tapers for an efficient coupling between the III-V SOA and the underlying Si-waveguide. An additional pair of adiabatic 50µm long Si tapers is used to couple the optical mode between the 3µm wide Si-waveguide underneath the III-V SOA and the single-mode rib waveguide. The design and fabrication of the III-V SOAs is similar to what is described in detail in Ref. [4].

Prior to the µTP a combination of dry-etch (by RIE) and wet-etch (by BHF) was firstly applied to the SiPh chip to remove the back-end stack, to form the recess where the InP-based SOA will be integrated. The locally opened recess is slightly longer and wider than the pre-fabricated III-V SOA. Next, a thin DVS-BCB adhesive layer with a thickness of about 100nm was spray-coated to enhance the bonding strength between the III-V SOA and the underlying Si-waveguide. A short soft bake of spray-coated sample at 150°C was done before the µTP. The µTP was done by using a X-Celeprint µTP-100 lab-scale printer, followed by an oxygen-plasma etch to remove the photoresist encapsulation on the III-V SOA. The post-processing finishes by electrically connecting the devices to the silicon photonics back end. Fig. 3 shows a microscope image of two fabricated lasers with the two transfer-printed SOAs, both combined in a single output waveguide using a 3dB combiner. The SOA printed on the first laser (Laser 1) has a gain peak around 1575nm and the other one around 1525nm (Laser 2).

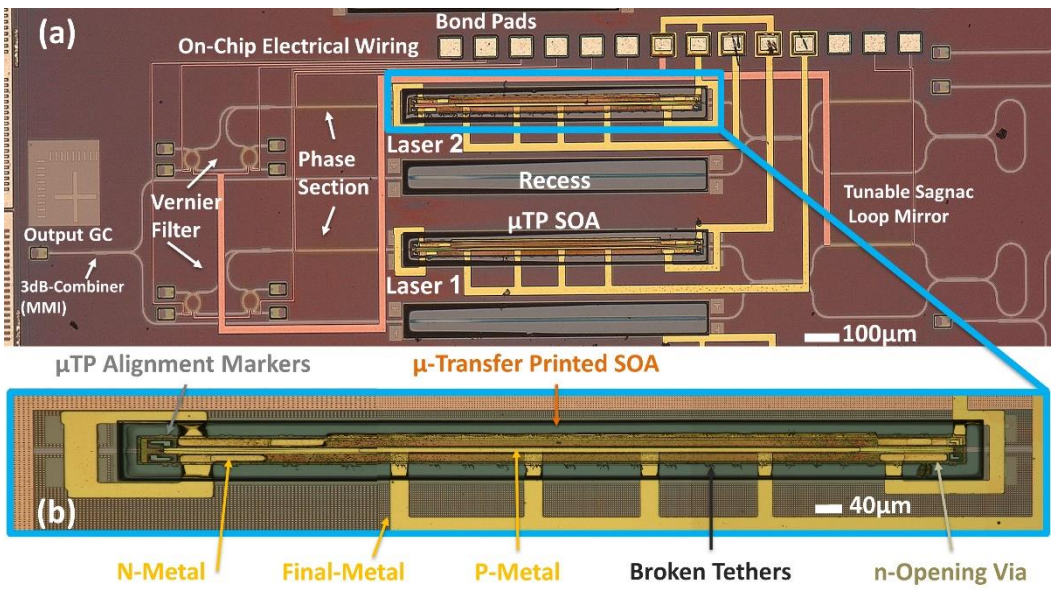

Fig. 3. (a) Microscope image of the combined widely tunable laser. (b) micro-transfer-printed III-V amplifier in the recess (after final metallization).

CHARACTERIZATION

To characterize the combined widely tunable laser, the sample is placed on a temperature-controlled stage stabilized at 15°C. The µTP III-V SOAs of both lasers had a differential resistance of about 10Ω biased at 140mA. The threshold current of both the lasers is around 60mA. Fig.4 shows the discrete wavelength tuning by thermally tuning one of the micro-rings and phase section of each laser, which resulted in a tuning range of 120nm. The phase section is used to adjust the phase of the laser cavity to be matched with the tuned filter. Fine-tuning is achieved by thermally tuning both the micro-rings and the phase section simultaneously, as shown in the inset.

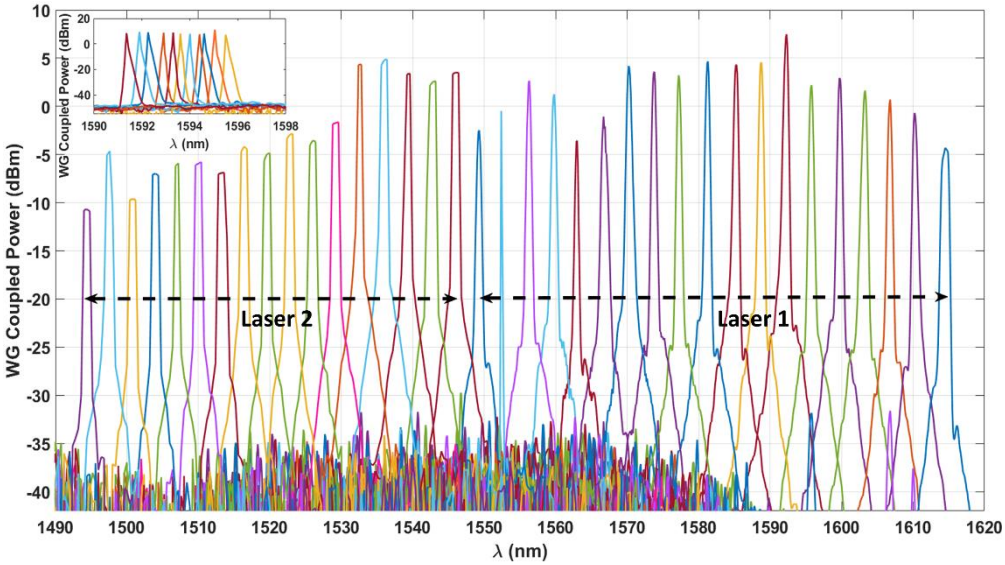

Fig. 4. Wavelength tuning behavior of the combined widely tunable laser (Fine-tuning is done in 10 steps over a range of 4nm, which is equal to the FSR of one ring).

CONCLUSION

For the first time, we demonstrate a 120nm III-V-on-Si widely tunable laser by micro-transfer printing pre-fabricated InP-based SOAs on a SiPh platform. This is a stepping stone towards the realization of complex PICs with integrated lasers and semiconductor optical amplifiers over a wide range of wavelengths for applications such as sensing, spectroscopy and optical communication.

Acknowledgements: This work was supported by the Europian Union's Horizon 2020 research and innovation programs under agreement No. 871345 (MedPhab) and No. 814276 (ITN-WON).

References

[1] C. Xiang et al., "High-Performance Silicon Photonics Using Heterogeneous Integration", IEEE Journal of Selected Topics in Quantum Electronics, vol. 28, no. 3, pp. 1-15, 2022

[2] Wang, Z. et al., "Novel Light Source Integration Approaches for Silicon Photonics", Laser & Photonics Reviews, vol. 11, pp. 63, 2017

[3] J. Zhang et al., "III-V-on-Si Photonic Integrated Circuits Realized Using Micro-Transfer-Printing", APL Photonics (invited), vol. 4, pp. 110803-1108013, 2019

[4] B. Haq et al., "Micro-Transfer-Printed III-V-on-Silicon C-Band Semiconductor Optical Amplifiers", Lasers & Photonics Reviews, vol. 14, 1900364, 2020