Low Noise 2.6 to 26 GHz Tenfold Frequency Multiplication by an InP Broadly Tunable Optical Comb

Nicola Andriolli[1], Eduardo Saia Lima[2], Evandro Conforti[3], Giampiero Contestabile[4*] and Arismar Cerqueira Sodré Junior[2]

[1] CNR-IEIIT, Via Caruso 16, 56122 Pisa, Italy
[2] Lab. WOCA, INATEL, Santa Rita do Sapucai, Brazil
[3] DECOM - University of Campinas, Brazil
[4] Scuola Superiore Sant'Anna, Via Moruzzi 1, 56124 Pisa, Italy
[*] corresponding author e-mail: giampiero.contestabile@santannapisa.it

We report low phase noise tenfold frequency multiplication based on an InP monolithically integrated optical frequency comb (OFC) generator, made by a DFB laser and cascaded optical modulators. The tenfold multiplied signal at 26 GHz, useful for 5G New Radio applications, provides a remarkably low phase noise, equivalent to the radio frequency generator used as an electrical source for the OFC at the same RF power.
Keywords: *mm-waves, optical frequency comb generation and InP monolithic integration.*

INTRODUCTION

Millimeter-wave signals with high spectral purity and low phase noise (PN) are mandatory in several scenarios, such as wireless communications, radar, and spectroscopic sensing [1]. In these applications, electronic synthesized radio frequency (RF) generators are used, especially for generating signals in the mm-waves range, even if they are typicallybulky and expensive. To overcome these issues, several techniques for the generation of low-phase-noise and frequency-tunable mm-waves implemented in the optical domain have been proposed, such as external modulation, optical injection locking, and optical phase-lock loop [2]. In particular, external modulation based on phase modulators (PMs) and Mach–Zehnder modulators (MZMs) has demonstrated potential to provide generation and frequency multiplication with low phase noise, offering large flexibility in terms of selection of both wavelength and frequency repetition rate [3]. In this context, a photonic integrated optical frequency comb (OFC) generator based on cascaded modulators monolithically integrated in an Indium phosphide (InP) platform has been recently reported [4, 5]. In this contribution, we experimentally demonstrate low-phase-noise mm-waves generation based on the integrated optical frequency comb. More in detail, we show that the OFC-based tenfold multiplied signal obtained at 26 GHz is suitable for 5G New Radio (NR) wireless transmission, providing remarkably low phase noise, equivalent to the one generated by the commercially available RF generator used as comb driving source.

DEVICE DESCRIPTION, EXPERIMENTAL SETUP AND RESULTS

Fig. 1(a) shows a schematic of the InP photonic integrated circuit characterized in [4, 5] and implementing the optical frequency comb generator. The device has been integrated in an Indium Phosphide multi-project wafer run exploiting a generic integration platform. An on-chip distributed Bragg reflector laser diode (DBR-LD) is used as a continuous-wave (CW) light source, while an external laser coupled to the PIC input waveguide through a spot-size converter (SSC) can also be employed. The CW signal from either source enters a 2×2 multi-mode interference (MMI) splitter, which sends the divided signals to a monitor output or toward a dual-drive Mach-Zehnder modulator. In detail, the MZM is composed of a 1×2 MMI splitter, two 1-mm-long PMs, and a 2×1 MMI employed as an optical combiner. The phase modulators, exploiting the quantum-confined Stark effect, have a 3-dB bandwidth of about 7 GHz and a V_π of about 5 V. The signal then crosses a series of two further 1-mm-long PMs. Finally, the signal is amplified by a 500-µm-long multi quantum-well SOA and then, coupled to the output fiber through another SSC. A high numerical aperture fiber array is aligned at the chip edge by means of a micro-positioner, minimizing coupling losses due to misalignment. The PIC has been mounted on a metal chuck and connected through wire bonds to a custom-designed printed circuit board (PCB) where four RF ports drive the phase modulatorsand five DC ports feed the DBR sections and the SOA. The chip on the metal chuck surrounded by the PCB is depicted in Fig. 1(b): the footprint is around 4.5×2.5 mm^2, limited by design constraints concerning the orthogonal placement of PMs and gain sections. The PCB with SMA RF interfaces and the general purpose input/output (GPIO) DC interfaces is shown in Fig. 1(c).

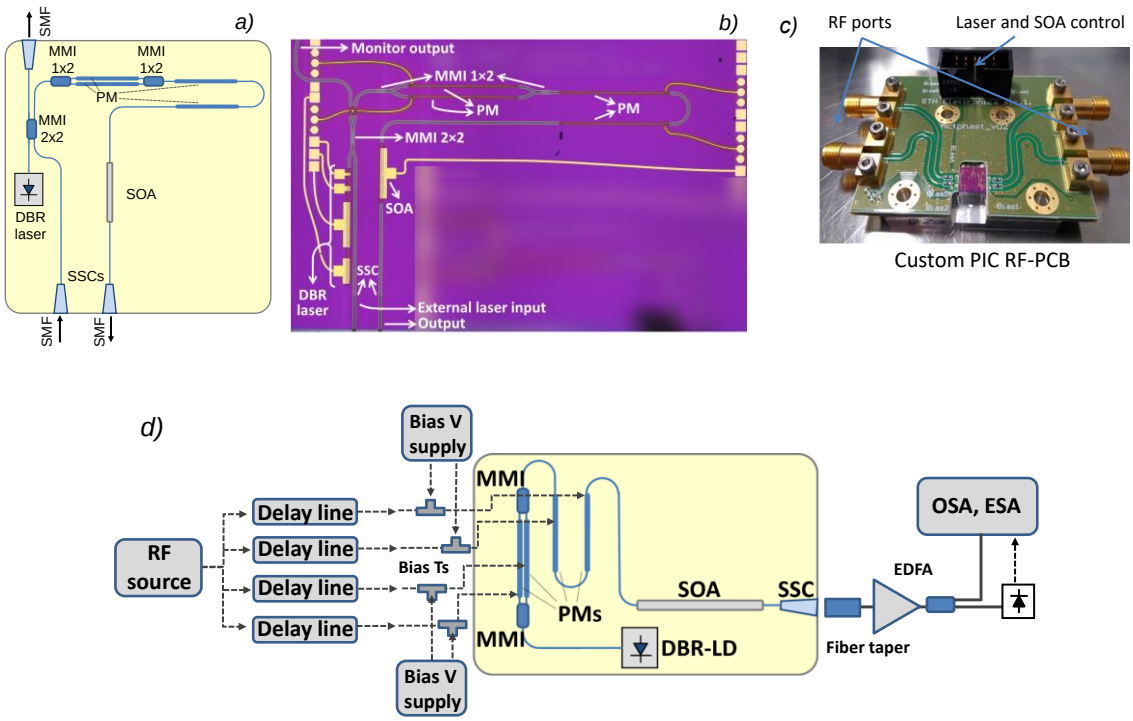

Fig. 1. a) Integrated comb generator PIC schematic. b) Picture of the fabricated PIC (Footprint: 4.5x2.5 mm²). c) PIC-PCB assembly. d) Experimental setup for comb generation test.

Fig. 1(d) reports the block diagram of the proposed low-phase-noise tenfold frequency multiplication based on an integrated OFC. A 43-GHz RF generator (Keysight E8267D PS) provides a 25 dBm electrical carrier centered at 2.6 GHz, which is equally divided in four by means of an electrical splitter. The phase of each branch is controlled by mechanical delay lines, enabling a proper adjustment on the temporal phase alignment among the PMs, which directly impacts the OFC spectral flatness. Afterward, bias tees have been used for combining the electrical carriers with the required DC bias voltage, feeding the PMs through SMA connectors. In order to achieve a large number of comb lines and enhance the comb flatness, the PMs have been driven with V_π multiples, whereas the MZM has been polarized around V_π. The integrated DBR laser and the SOA currents have been set to 70 mA and 55 mA, respectively. At the PIC output, the power of the optical frequency comb was about -6 dBm. The signal has been then split in two ways: 1% optical power was monitored by an optical spectrum analyzer (OSA), whereas the remaining optical power (99%) reached an Erbium-doped fiber amplifier (EDFA) and then a high-speed photodetector. The EDFA has been used to monitor and control the optical power, ensuring 2 dBm optical power at the photodetector input. Since conventional optical spectrum analyzers cannot resolve the comb spectrum, we have used a heterodyne detection technique to reconstruct the optical spectrum. Results are reported in Fig. 2(a), where the 2.6 GHz spaced optical frequency comb centered at 193.5 THz is shown. The optical tones extend from 193.4 THz up to 193.6 THz. More in detail, there are 19 tones within a 10 dB intensity range from the maximum optical power level, characterized by an optical signal-to-noise ratio (OSNR) larger than 40 dB. Considering the whole comb and the noise floor around -60 dBm, 49 tones show an OSNR larger than 20 dB, whereas 36 tones present an OSNR beyond 30 dB. Therefore, the OFC is suitable for generating mm-waves signals on a wide spectral range.

The phase-stabilized optical frequency comb lines have been converted into a set of electrical tones by means of a 74-GHz bandwidth photodetector and measured by a 43-GHz electrical spectrum analyzer (ESA). A stable electrical comb with 2.6 GHz repetition rate can be appreciated over the entire frequency range, as shown in Fig. 2(b). In addition, a high signal-to-noise ratio (SNR) can be observed for all generated harmonics. Therefore, after the photodetection process, the electrical carriers can be properly separated and employed in specific applications, depending on the desired frequency range. Considering a tenfold frequency multiplication, a high spectral purity mm-wave electrical carrier can be noted at 26 GHz. We have used a 1-dB insertion loss band-pass filter (BPF) with 1-GHz bandwidth centered at 26 GHz for isolating the single harmonic and improving the spectral purity, as presented in the inset of Fig. 2(b), since this frequency range has been standardized for 5G mm-wave applications. As expected, the electrical filter selected only the 26 GHz signal, demonstrating a high spectral purity and a significant electrical power of -34 dBm.

Phase noise measurements are essential in communication systems, enabling to precisely characterize the frequency stability of systems and oscillators. In order to validate the low-phase noise tenfold frequency multiplication based on an integrated OFC, we have measured the OFC-based signal phase noise and compared with the one of the low-noise electrical RF generator used to generate the optical frequency comb. Fig. 2(c) reports the phase noise measurements at 2.6 GHz and 26 GHz for both the electrical RF generator and the optical one. The monolithically integrated OFC source provides phase-stabilized optical lines and, as a consequence, frequency multiplication with low phase noise. Considering the 26 GHz signals, measured phase noise is around -50 dBc/Hz and -80 dBc/Hz for 10 Hz and 1 kHz offset, respectively. This remarkably low phase noise is comparable to the one of commercially available electrical RF generator for the same RF power. Regarding the fundamental frequency (2.6 GHz), a similar phase noise response can be appreciated, with -70 dBc/Hz and -90 dBc/Hz for 10 Hz and 1 kHz offset, respectively. Therefore, it is noteworthy that the InP integrated OFC is suitable for implementing, in a compact and low power device, RF frequency multiplication up to mm-waves, with a phase noise equivalent to the one of the low noise bulk electric RF generators i.e., without adding any significant phase distortion.

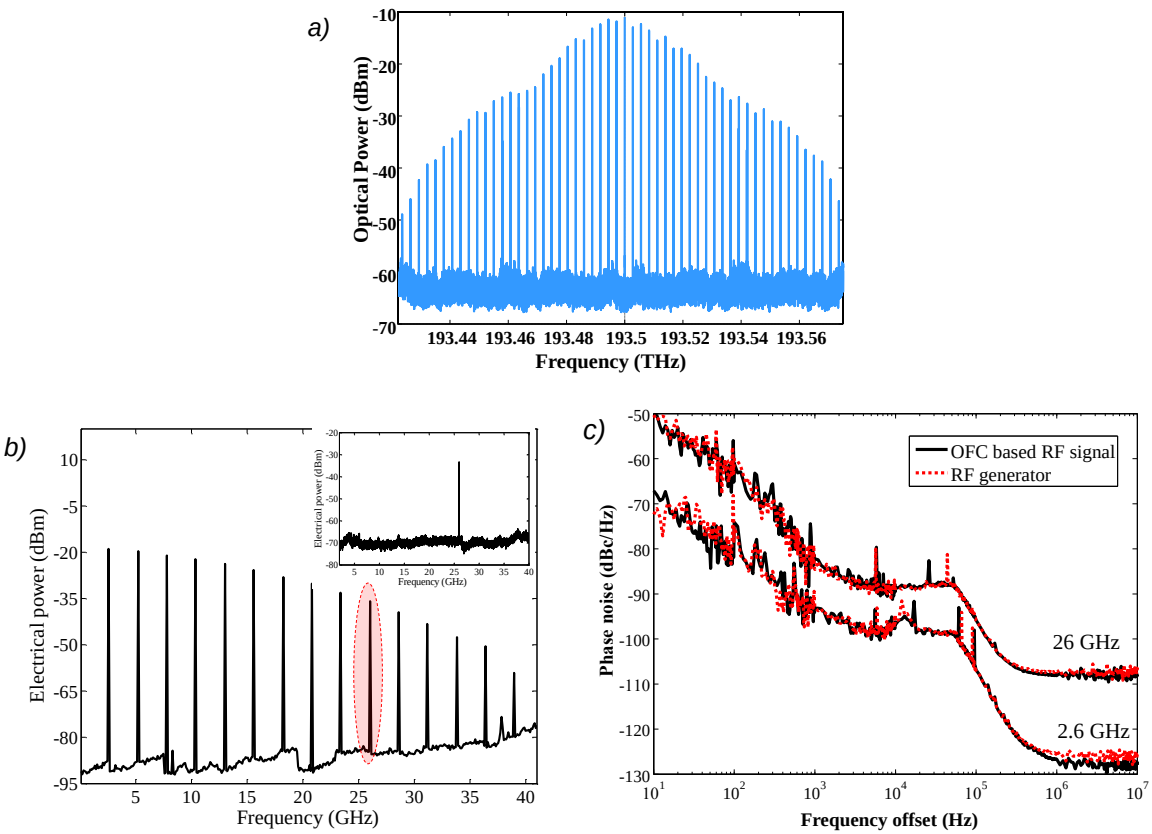

Fig. 2. a) 2.6 GHz optical frequency comb at the PIC output b) 2.6-GHz electrical comb at the photodetector output; in the inset the filtered tone at 26 GHz. c) 2.6 GHz and 26-GHz phase noise comparison between OFC-based signals and the commercial RF generator.

Acknowledgements: This work was supported by RNP-MCTIC Grant No. 01245.010604/2020-14, under the Brasil 6G project, CNPq, CAPES, FINEP and FAPEMIG. Fapesp Contracts #21/06569-1 and #15/24517-8; CNPq #402471-2021-0. Dr. Marco Chiesa is gratefully acknowledged for the support in PIC mounting.

References

[1] I. Degli-Eredi, P. An, J. Drasbæk, H. Mohammad Hosseini, L. Nielsen, P. Tønning, S. Rommel, I. T. Monroy, and M. J. Heck, “Millimeter-wave generation using hybrid silicon photonics,” Journal of Optics, vol. 23, no. 4, p. 043001, 2021

[2] V. Torres-Company et al. “Optical frequency comb technology for ultra-broadband radio-frequency photonics” Laser Photonics Rev. 8, No. 3, 368–393 (2014)

[3] W. Li and J. Yao, “Investigation of photonically assisted microwave frequency multiplication based on external modulation,” IEEE Transactions on Microwave Theory and Techniques, vol. 58, no. 11, pp. 3259–3268, 2010

[4] N. Andriolli, T. Cassese, M. Chiesa, C. de Dios, and G. Contestabile, “Photonic integrated fully tunable comb generator cascading optical modulators,” Journal of Lightwave Technology, vol. 36, no. 23, pp. 5685–5689, 2018

[5] F. Bontempi, N. Andriolli, F. Scotti, M. Chiesa, and G. Contestabile, “Comb line multiplication in an InP integrated photonic circuit based on cascaded modulators,” IEEE Journal of Selected Topics in Quantum Electronics, vol. 25, no. 6, pp. 1–7, 2019