Mid-infrared Ghost spectroscopy application using an entangled photons source in silicon

Matteo Sanna*, Davide Rizzotti, Stefano Signorini** and Lorenzo Pavesi**

Nanoscience Laboratory, Department of Physics, University of Trento, Via Sommarive 14, 38123, Trento, Italy
* matteo.sanna@unitn.it
**current address: ICFO-Institut de Ciencies Fotoniques, Av. Carl Friedrich Gauss 3, 08860 Castelldefels (Barcelona), Spain

We present two-photon state generation on an integrated platform using intermodal Spontaneous Four-Wave Mixing. The goal is to use this source for biphoton spectroscopy in the mid-infrared spectral region where the spectral fingerprints of molecules are contained. The technique of Ghost spectroscopy is able to achieve important advantages over classical absorption spectroscopy by allowing more detailed information to be obtained in the presence of environmental noise.

Keywords: *Nonlinear optics, Integrated photonics, Ghost spectroscopy*

INTRODUCTION

The mid-infrared (MIR) spectral region, which extends from 2 µm to 15 µm, is of interest to many areas of physics. Applications range from environmental monitoring [1] to LIDAR technology [2], from free space telecommunications [3] to applications in biology and medicine [4],[5]. The MIR region hosts the atmospheric window and the fingerprint of several molecular compounds [6]. This high and specific molecular response is of great interest to optical sensing. However, MIR optical technology is not mature, especially regarding detection, limited by low sensitivity devices. These limitations can be overcome by quantum photonics [7]. In particular, time-energy entangled photon pairs can be used to beat the shot noise limit [8] and to relax the technological constraints of MIR devices [7]. These photon pairs can be generated by non-linear optical processes, such as spontaneous parametric down-conversion (SPDC) or spontaneous four-wave mixing (SFWM) [9], [10].

In our work, we use an entangled photon source to implement quantum Ghost Spectroscopy (GS) for gas sensing [11], [12]. This spectroscopy method, in fact, uses time-energy correlated photons, where one photon interacts with the sample while the other is spectrally analyzed. In our case, the photon interacting with the gas belongs to the MIR, while the one spectrally analyzed is in the near infrared (NIR). Thanks to the spectral correlation between the photons, the gas spectral information probed by the MIR photon can be accessed by measuring the spectrum of the NIR photon, while the MIR one is detected with a bucket detector. In this way, this technique allows to use more efficient spectrometers with respect to MIR solutions. For this purpose, entangled photon pairs with a large spectral difference are required. By using spontaneous intermodal four-wave mixing (SFWM) [13], [14], we are able both to generate these photon pairs in a silicon integrated photonic device (SOI) and to apply this twin photon source for GS of CO_2 around 2 µm [15]. Specifically, using a continuous wave (CW) laser in the C-band, biphotons are generated one around 2 µm and the other around 1.3 µm. We are able to retrieve efficiently the CO_2 spectrum, demonstrating also a higher measurement visibility compared to classical spectroscopy.

RESULTS

The intermodal SFWM process involves the annihilation of two pump photons and the generation of a photon pair: an idler photon and a signal photon. The characteristic feature of intermodal is to use the chromatic dispersions of different spatial modes of an optical waveguide to achieve perfect phase matching [13]. We used an optical waveguide 1.5 cm long, with a channel cross-section of (0.22 x 2) μm^2. We use a tunable pump CW laser at 1570 nm, injected on the TE0 and TE1 modes. The signal is generated around 2003 nm on TE1 and the idler around 1291 nm on TE0. To characterize the source, we detect the idler with an InGaAs single-photon detector (SPAD) and the signal, after being up-converted to the visible [16], with a Silicon SPAD. Due to the large detuning of the generated

photons from the pump and to their discrete bands, the pump can be easily rejected with short and long pass filters [17]. Fig. 1 shows the setup used for the coincidence measurement with details given in its description.

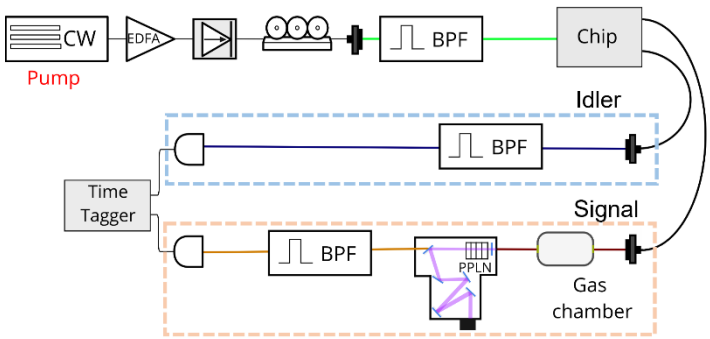

Fig. 1. Scheme of the experimental setup. A tunable continuous wave CW laser followed by its amplification and filtering stage. The chip where the SFWM is performed. After the generation of the two states, the idler channel (dashed blue line region) has a tunable band pass filter (BPF) and an InGaAs SPAD. The signal channel (orange dashed line region) has a Gas chamber followed by an upconverter system coupled to a silicon SPAD after a BPF.

To describe and compare the setups used for photon-pair generation and detection, the coincidence-to-accidental ration (CAR) is used [18]. This parameter quantifies the probability of detecting a single-photon coincidence between signal and idler against noise and multi-pair events. The maximum CAR value is 114 ± 4, obtained with an on-chip power of 7 mW, with (0.279 ± 0.007) Hz net coincidence rate (Fig. 2a). These results mark a 4-fould improvement with respect to the state of the art of integrated two-photon MIR sources [19]. The single-photon behavior of the source was demonstrated, measuring the heralded $g^{(2)}$ ($g_H^{(2)}$), with the signal as the heralded photon and the idler as the herald photon [18]. We measured a minimum $g_H^{(2)}(0) = 0.06 \pm 0.02$ at 10.5 mW, see Fig. 2b, demonstrating the antibunching regime of the generated photon in the MIR.

We subsequently used this source to performe quantum GS. For this application, it is useful to have a source whose

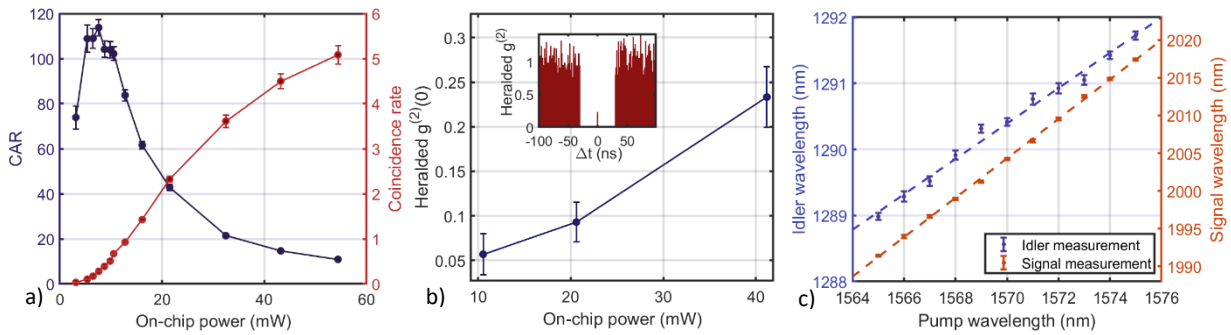

Fig. 2. a) CAR (dark blue) and net coincidence rate (dark red) as a function of pump power. b) $g_H^{(2)}(0)$ as a function of pump power. c) Signal (orange) and idler (purple) variation wavelengths as a function of pump wavelength.

wavelength can be tunable. Through the SFWM process, this can be easily achieved by simply tuning the wavelength of the pump. Fig. 2c shows the variation of the measured wavelength of the generated photons as a function of the wavelength of the pump. This is possible thanks to the energy conservation, which governs the spontaneous process used. In particular, the signal spans a range of more than 20 nm when the pump wavelength is changed by ± 5 nm, while the idler variation is less than ± 1.5 nm. In this way, the source can be used to perform broadband spectroscopy, while the idler can be easily filtered out and detected, all by shifting the pump laser wavelength by a few nanometers. The same tuning cannot be achieved with commonly used intramodal SFWM.

To compare GS with classical spectroscopy, we measured both the count rates of signal photons (classical spectroscopy) and the net coincidences between idler and signal photons (GS) as a function of pump wavelength. To perform this measurement and to emphasize the advantage of GS, an external environmental noise is inserted into the photon signal detection line, inducing a low signal-to-noise ratio (SNR) on the bare signal detection (SNR<<1). Fig. 3 shows the theoretical spectrum of the CO_2 (black line), compared with the CO_2 measured with

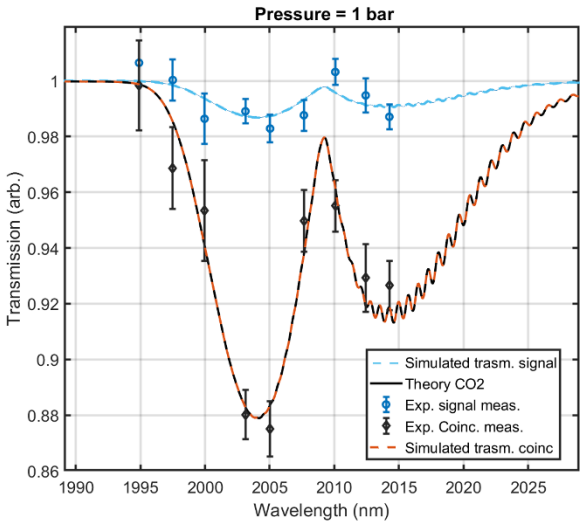

Fig. 3. Measurement with a cell filled with 1 bar CO_2. The dark blue dots is the classical spectroscopy measurement, the blue dashed line the performed simulation. The black dots is the experimental GS measurements, the orange dashed line the performed simulation. The black line corresponds to the theorical spectrum. The experimental count rates are recorded as a function of wavelength.

classical spectroscopy (dark blue dots) and with the GS technique (black dots) and the corresponding simulations (dashed lines). A significant reduction of the noise baseline is observed in the net coincidence spectrum, resulting in improved visibility of the spectral measurement.

With this measurement, we demonstrate that GS retrieves correctly the spectrum of CO_2, providing at the same time higher visibility with respect to classical spectroscopy in the same noisy environment. The simulations perfectly match the trend of the experimental measurements obtained. This result paves the way to miniaturized quantum devices able to surpass classical limitations faced by MIR technologies.

DISCUSSION

In this work, we discussed the use of an integrated silicon entangled photon source for MIR ghost spectroscopy through the intermodal SFWM process. Using the GS technique, we demonstrate noise reduction in the presence of unknown environmental noise by coincidence measurements. This can be seen as a temporal filter, allowing us to retain all correlated photons and exclude all uncorrelated counts composed of the accidental counts and noise. The future perspective is to show a higher spectral resolution in the MIR by filtering only the beam in the NIR. This is possible by exploiting the spectral correlation that characterizes the CW-pumped SFWM.

Acknowledgements: This project has been supported by Q@TN, the joint lab between University of Trento, FBK-Fondazione Bruno Kessler, INFN-National Institute for Nuclear Physics and CNR-National Research Council.

References

[1] Andreas Fix, et al. “Upconversion-based lidar measurements of atmospheric CO2”. In Optics and Photonics for Energy and the Environment, pages EM4A–5. Optical Society of America, 2016.
[2] Petter Weibring, Hans Edner, and Sune Svanberg. “Versatile mobile lidar system for environmental monitoring”. Applied Optics, 42(18):3583–3594, 2003.
[3] Yulong Su et al. “10 GBPS DPSK transmission over free-space link in the mid-infrared”. Optics Express, 26(26):34515–34528, 2018.
[4] Giuseppe Bellisola and Claudio Sorio. “Infrared spectroscopy and microscopy in cancer research and diagnosis”. American journal of cancer research, 2(1):1, 2012.
[5] Kimberlee Potter, Linda H Kidder, Ira W Levin, E Neil Lewis, and Richard GS Spencer. “Imaging of collagen and proteoglycan in cartilage sections using fourier transform infrared spectral imaging”. Arthritis & Rheumatism, 44(4):846–855, 2001.
[6] Daniel Popa and Florin Udrea. “Towards integrated mid-infrared gas sensors”. Sensors, 19(9):2076, 2019.
[7] Rebecca Whittaker et al. “Absorption spectroscopy at the ultimate quantum limit from singlephoton states”. New Journal of Physics, 19(2):023013, 2017.
[8] Giorgio Brida, Marco Genovese, and I Ruo Berchera. “Experimental realization of sub-shot-noise quantum imaging”. Nature Photonics, 4(4):227, 2010.
[9] Prabhakar, Shashi, et al. "Two-photon quantum interference and entanglement at 2.1 μm." Science advances 6.13 (2020): eaay5195.

[10] Marco Fiorentino et al. “Spontaneous parametric down-conversion in periodically poled KTP waveguides and bulk crystals”. Optics express, 15(12):7479–7488, 2007.
[11] TB Pittman, YH Shih, DV Strekalov, and Alexander V Sergienko. “Optical imaging by means of two-photon quantum entanglement”. Physical Review A, 52(5):R3429, 1995.
[12] Kalachev, A. A., et al. "Biphoton spectroscopy of YAG: Er3+ crystal." Laser Physics Letters 4.10 (2007): 722.
[13] Stefano Signorini et al. “Intermodal four-wave mixing in silicon waveguides”. Photonics Research, 6(8):805–814, 2018.
[14] Stefano Signorini et al. “Silicon photonics chip for inter-modal four wave mixing on a broad wavelength range”. Frontiers in Physics, 7:128, 2019.
[15] Signorini, S., et al. "A silicon source of heralded single photons at 2 μ m." APL Photonics 6.12 (2021): 126103.
[16] Mattia Mancinelli et al. “Mid-infrared coincidence measurements on twin photons at room temperature”. Nature communications, 8(1):1–8, 2017.
[17] Paesani, Stefano, et al. "Near-ideal spontaneous photon sources in silicon quantum photonics." Nature communications 11.1 (2020): 1-6.
[18] Signorini, S., and L. Pavesi. "On-chip heralded single photon sources." AVS Quantum Science 2.4 (2020): 041701.
[19] Rosenfeld, Lawrence M., et al. "Mid-infrared quantum optics in silicon." Optics Express 28.25 (2020): 37092-37102.