Numerical Study of a Wavelength Converter Based on Cascaded Interactions in a PPLN Waveguide

Luca Razzari, Carlo Liberale, Ilaria Cristiani, Riccardo Tediosi,
and Vittorio Degiorgio
Istituto Nazionale per la Fisica della Materia and Dipartimento di Elettronica,
Università di Pavia, via Ferrata 1, 27100 Pavia, Italy
razzari@ele.unipv.it

A wavelength conversion device based on $\chi^{(2)}$ cascaded interactions is presented. The conversion mechanism relies on the combination of amplification and nonlinear dephasing of the signal occurring during the cascaded process. The device performance is numerically evaluated in the pulsed regime.

Keywords: guided-wave optics, nonlinear phase, all-optical wavelength conversion

1. Introduction

All-optical switching devices are required for future photonic network systems. Possible candidates are devices using quasi-phase-matched (QPM) cascaded second-order interactions in lithium niobate waveguides, which can present ultrafast response, potentially low switching power, wide wavelength coverage, and integration compatibility.

The cascade involves second-harmonic generation (SHG) of a pump field p at frequency ω_p followed by difference-frequency generation (DFG) between the second harmonic of p and an additional input field s at frequency ω_s. The cascaded interaction permits the generation of a new field c at frequency $\omega_c = 2\omega_p - \omega_s$ and the amplification of s. [1-4] This effect can indeed give rise to large effective third-order nonlinearities with ultrafast response times and perfect transparency of the nonlinear medium.

In this article we present a numerical study of a new optical wavelength converter scheme based on cascaded interactions in a periodically poled lithium niobate (PPLN) waveguide. We discuss the performance of the device by considering a Mach-Zehnder interferometer configuration. The conversion mechanism is based on the signal amplification combined with a large nonlinear phase shift generated by the cascading process. The resulting performance indicates high conversion efficiency and wide band operation.

The nonlinear phase shift has been previously demonstrated only by considering one input beam, p, propagating in a $\chi^{(2)}$ material close to, but not exactly at, phase-matching [5]. Conversely, we show that a considerable nonlinear dephasing can be induced on the signal field s by a cascaded interaction that is phase-matched for SHG of the pump, but is appropriately mismatched for the DFG process between SH and signal.

Whereas the previous literature on the subject is limited to the case of stationary waves, to study the device performance we numerically solve the nonlinear time-dependent propagation equations. The efficiency of the optical converter is calculated as a function of the detuning of the DFG process and of the duration of the pump pulse.

2. Scheme of the device

Our model considers a PPLN waveguide having poling period Λ and length L. The pulse propagation and the conversion phenomena into the waveguide are described by a standard nonlinear system, valid under the slowly-varying-envelope-approximation, including second-order dispersion terms. The system of equations is solved by the split-

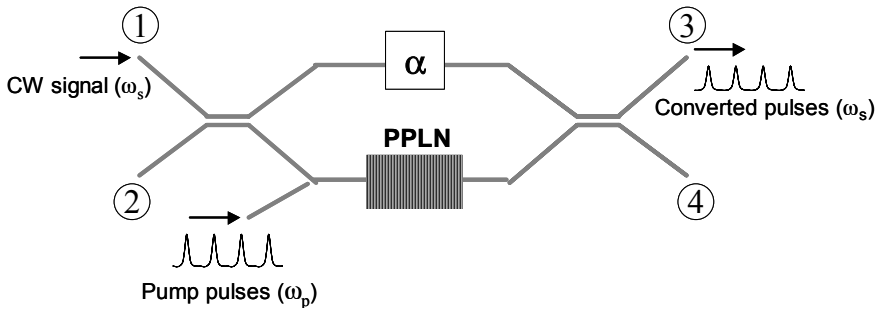

Fig. 1 Scheme of the proposed device.

step Fourier method. The simulation is performed by assuming a CW input signal with a power of 1 mW, and a pulsed pump with peak power of 1 W. The pump pulses are taken to be transform-limited hyperbolic-secant pulses with full-width-half-maximum duration T.

The waveguide is inserted in the Mach-Zehnder interferometer schematically shown in Fig.1. In presence of the pump, the signal travelling through the PPLN waveguide is amplified and phase-shifted. On both arms we consider a loss per unit length α. The port 1 to port 3 transfer function is the following

$$T_{1-3} = \left| \frac{1}{2} \left(e^{-\alpha L} - \left| \frac{s(L)}{s(0)} \right| e^{-i\phi_{NL}} \right) \right|^2 \tag{1}$$

where ϕ_{NL} is the nonlinear phase shift induced on s by the cascading process. The interferometer arms are balanced in such a way that, in absence of pump, the CW signal entering at port 1 appears only at port 4. In fact, when the pump is switched off the second term in the parenthesis equals $e^{-\alpha L}$, giving $T_{1-3} = 0$. It can be easily seen from equation 1 that, when the pump pulse is present, the interferometer can be unbalanced both by the signal gain and by the nonlinear phase. The signal appearing at port 3 is a temporal replica of the pump pulse train at the central frequency ω_s.

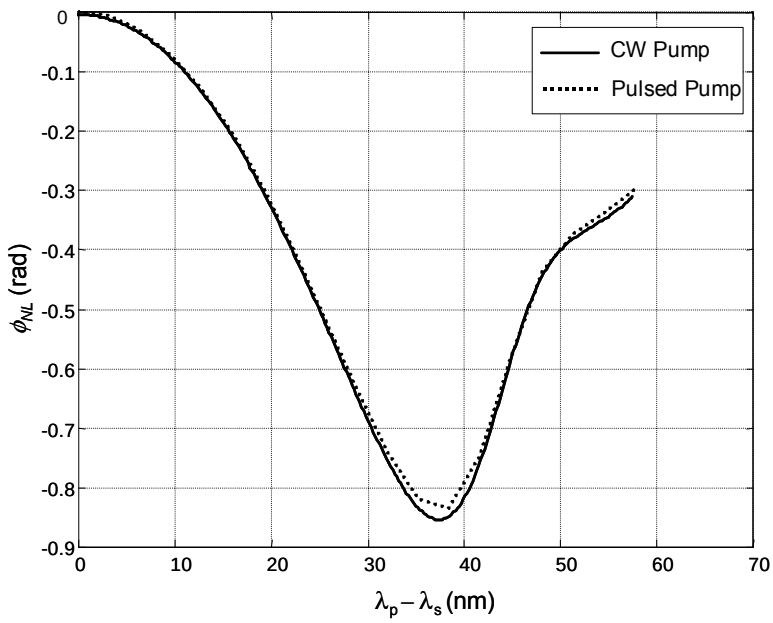

Fig. 2 Nonlinear phase shift of the signal due to a CW pump (solid line) or to a pulsed pump (dotted line)

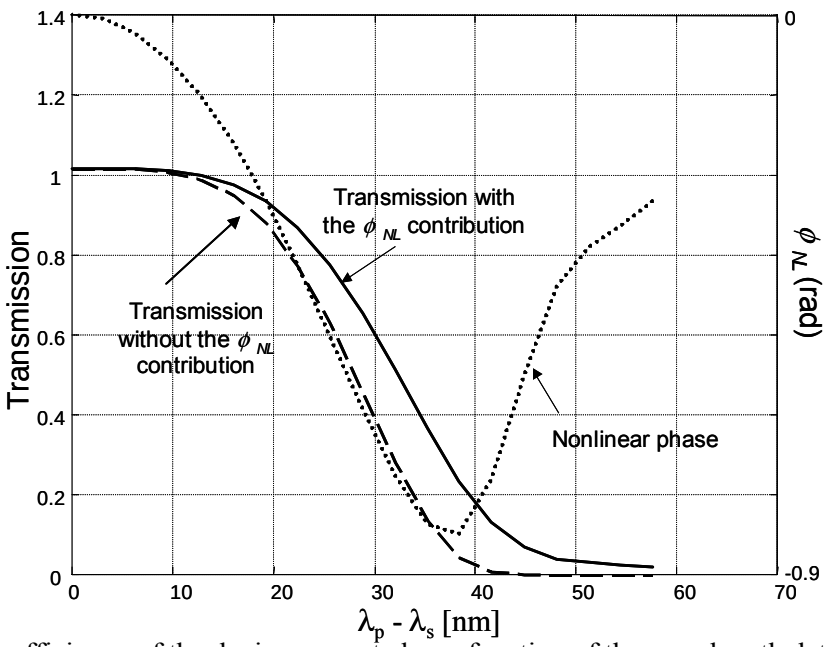

Fig. 3 Conversion efficiency of the device presented as a function of the wavelength detuning (solid line). The dashed line represents the conversion efficiency obtained without considering the nonlinear phase shift. The behaviour of ϕ_{NL} is reported in dotted line.

We have numerically derived the nonlinear phase shift ϕ_{NL} induced on the signal field by the cascaded interaction. We present in Fig. 2 the behavior of ϕ_{NL} as a function of the detuning between pump and signal, by assuming an input pump power of 1 W and a waveguide length of 6 cm. The phase shift attains the maximum value when the detuning is around 37 nm. The figure shows also that the result obtained by using 150-ps pump pulses is almost identical to that obtained with a CW pump. In the pulsed case we consider the phase shift induced by the peak power.

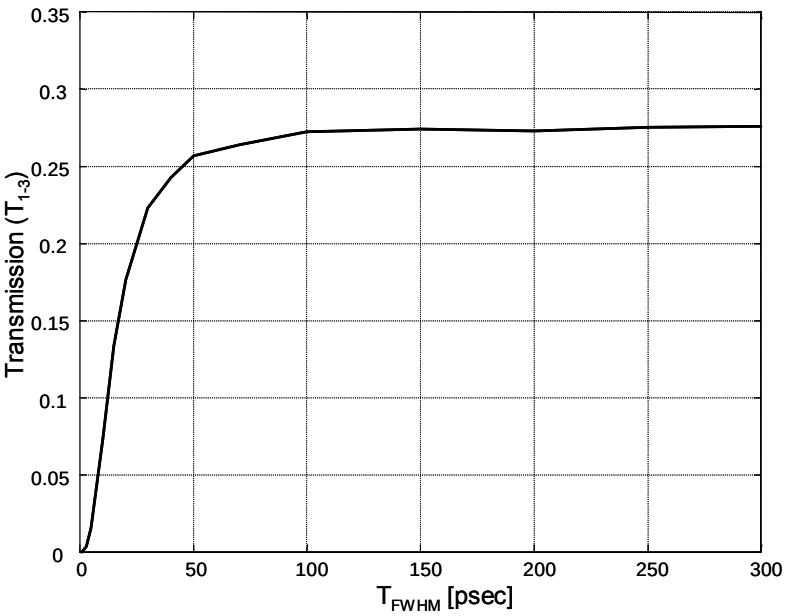

Fig. 4 T_{1-3} as a function of the pump pulse duration. The transmission is calculated at the wavelength at which the nonlinear phase shift is maximum

In figure 3 is reported T_{1-3} as a function of the wavelength detuning between the pump and the signal. For a 6 cm long PPLN waveguide the overall bandwidth is about 32 nm. The nonlinear phase shift contribution prevails when the detuning is larger and results in a widening of the conversion band.

Fig.4 shows the transmission T_{1-3} of the Mach-Zehnder interferometer, as a function of the pulse duration. The transmission drops considerably for short pulses: this fact has to be ascribed to the temporal walk-off due to the group-velocity mismatch between pump and second-harmonic field in the PPLN waveguide. Of course shorter pulses can be efficiently converted by decreasing the waveguide length.

To test the quality of the converted pulses obtained at the device output, we calculated the time dependent phase of the output pulses and their optical spectrum. Due the intrinsic characteristics of the cascading phenomenon and to the Mach-Zehnder transfer function, the output pulses have a different envelope shape and a shorter duration when compared to the sech input. At low values of the wavelength detuning between pump and signal, the conversion is mainly due to the signal amplification and the output pulses results transform limited. In the case of large detuning the nonlinear phase gives a larger contribution to the conversion phenomenon and the output pulses result slightly chirped.

3.Conclusions

As a conclusion, we have proposed a scheme for an all-optical wavelength converter exploiting the effects of amplification and nonlinear phase shift due to cascaded second-order interactions. By using waveguided interactions, the converter exhibits good efficiency and wide operation band with a limited input power. In order to limit the effects of temporal walk-off related to SH generation, an appropriate pulse duration and waveguide length have to be chosen.

References

[1] G.P. Banfi, P.K. Datta, V. Degiorgio, and D. Fortusini, "Wavelength shifting and amplification of optical pulses through cascaded second-order processes in periodically poled lithium niobate" *Appl. Phys. Lett.* **73**, 136-138, 1998 .

[2] I. Cristiani, G.P. Banfi, V. Degiorgio, L. Tartara "Wavelength shifting of optical pulses through cascaded second-order processes in a lithium-niobate channel waveguide" *Appl. Phys. Lett.*, **75,** 1198-1200, 1999.

[3] M.H. Chou, I. Brener, M.M. Fejer, E.E. Chaban, S.B. Christman, "1.55-μm-band wavelength conversion based on cascaded second-order nonlinearity in $LiNbO_3$ waveguides", *IEEE Photon. Technol. Lett.*, **11,** 653-655, 1999.

[4] G. Schreiber, H. Suche, Y. L. Lee, W. Grundkötter, V. Quiring, R. Ricken, and W. Sohler, "Efficient cascaded difference frequency generation at 2 GHz and 10 GHz repetition rate in a periodically poled Ti:$LiNbO_3$ waveguide" *Proc. ECIO* 209-212, 2001.

[5] G. I. Stegeman, D.J. Hagan, and L. Torner, "$\chi^{(2)}$ cascading phenomena and their applications to all-optical signal processing, mode-locking, pulse compression and solitons", *Opt. Quantum Electron.* **28** 1691-1740, 1996.